Name: Ryan Dunford	Date:	Event:	Track: Standard Setup

Track Conditions

❑ Indoor	☑ Tight	❑ Smooth	❑ Hard Packed	❑ Blue Groove	☑ Wet	❑ Low Bite	❑ High Bite
☑ Outdoor	☑ Open	☑ Rough	☑ Loose/ Loamy	☑ Dry	❑ Dusty	☑ Med Bite	❑ Other

Front Suspension

Ride Ht	27mm
Camber	-1.5
Toe	1 out
Sway Bar	2.5mm

Notes: Pro-RC drag link at 0 location
Arm Bushings

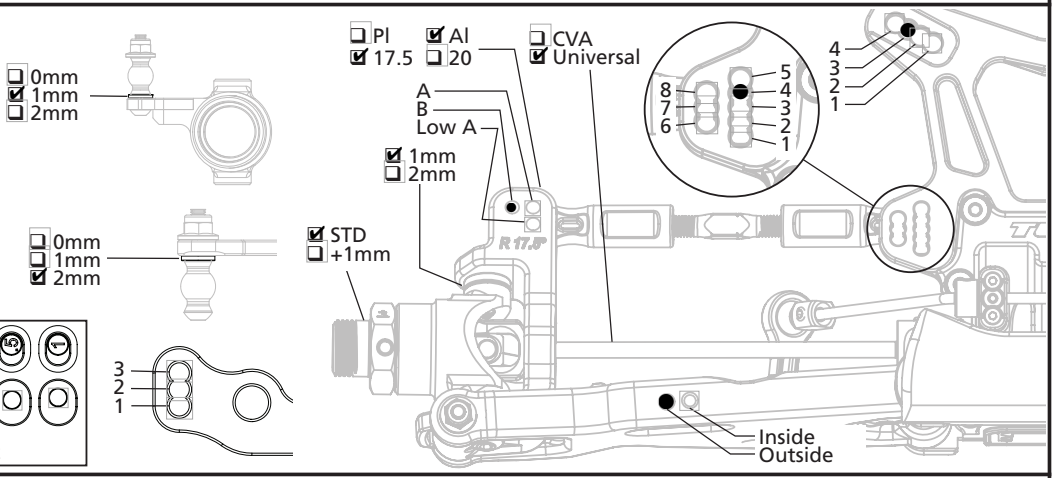

Rear Suspension

Ride Ht	27mm
Camber	-1.5
Sway Bar	2.6mm

Notes: Lit-RC C block inside/down
Light rear ring gear
Arm Bushings

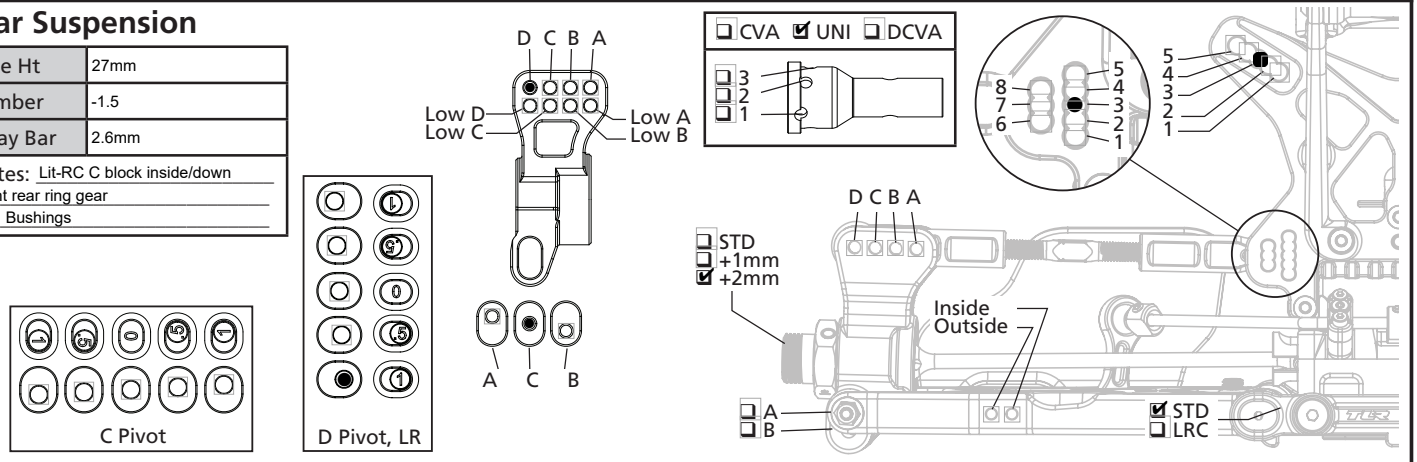

Chassis

Differentials

	Front	Center	Rear
Fluid	7k	6k	4k
Pins	☑ AL ❑ STL	☑ AL ❑ STL	☑ AL ❑ STL
Case	☑ STD ❑ HD	❑ STD ☑ HD	☑ STD ❑ HD

Wing	
Brand	HB
☑ Riser	
☑ Wicker Bill	
☑ FWD ❑ Back	

Electronics

Radio	DX6R	Servo	S6290
ESC	Tekin RX8	Battery	Spek 5000
Motor	Tekin 1900	Pinion/Spur	16/48
Initial Brake		Drag Brake	
Thro Prof		Timing Adv	
Thro Expo		Steering Expo	

Shocks

	Front	Rear
Shock Type	❑ Bladder ❑ Re Bladder ☑ Emulsion ❑ Vented	❑ Bladder ❑ Re Bladder ☑ Emulsion ❑ Vented
Shaft Dia	☑ 3.5 ❑ 4.0	☑ 3.5 ❑ 4.0
Piston	5x1.5 taper down	4x1.5, 1x1.9 taper down
Oil	47	42
Spring	Gold HB	Brown Evo
Stroke		
Droop	28	25

Tires
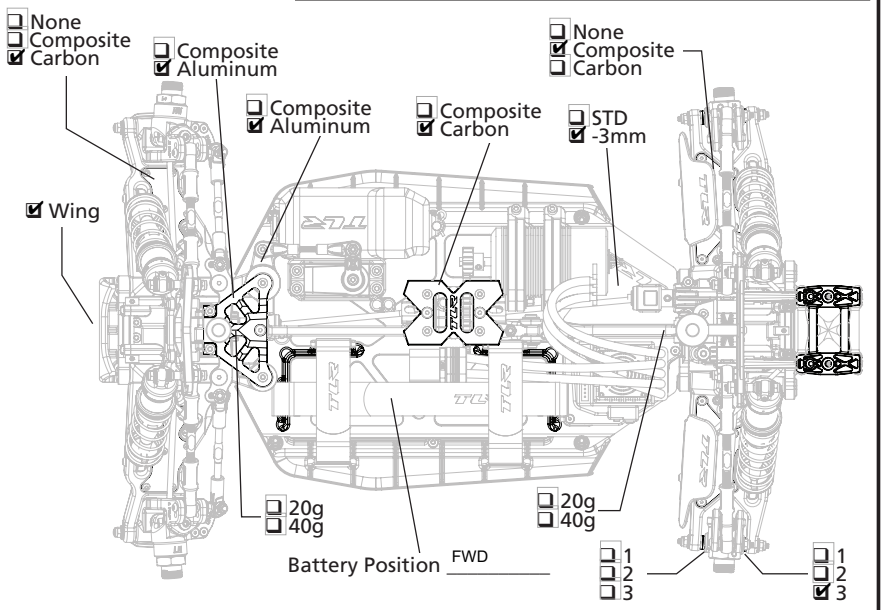
	Front	Rear
Brand	Proline	Proline
Tread	Holeshot	Holeshot
Compound	M3	M3
Insert		
Sauce