NOTE 1: RAMP FLOORING TO BE 19mm PLYWOOD SHEETING WITH NON-SLIP PAINTED FINISH

NOTE 2: PROVIDE SIGNAGE AT TOP & BOTTOM ENTRY POINTS OF RAMP, INSTALL APPROVED WHEELCHAIR ASSISTED SIGNAGE

NOTE 3: MIN. BALUSTRADING HGT. TO RAMP AND STAND TO BE 1000 MIN. HEIGHT

NOTE 4: UNLESS APPOVED OTHERWISE, RAMP DIMENSIONS SHALL BE IN COMPLIANCE WITH AS1428.

GENERAL NOTES

ALL CONTRACTORS SHALL VERIFY ALL DIMENSIONS PRIOR TO CONSTRUCTION.

FIGURED DIMENSIONS TO HAVE PREFERENCE OVER SCALED DIMENSIONS.

ALL CONSTRUCTION & WORKMANSHIP SHALL BE IN ACCORDANCE WITH THE RELEVANT AUST. STANDARDS, THE BUILDING CODE OF AUSTRALIA AND LOCAL COUNCIL REQUIREMENTS.

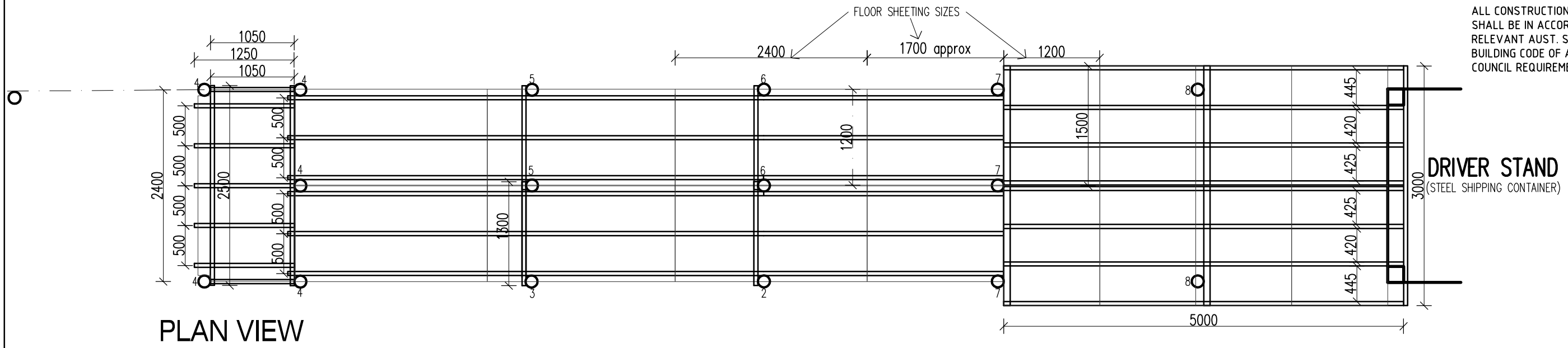

PLAN VIEW

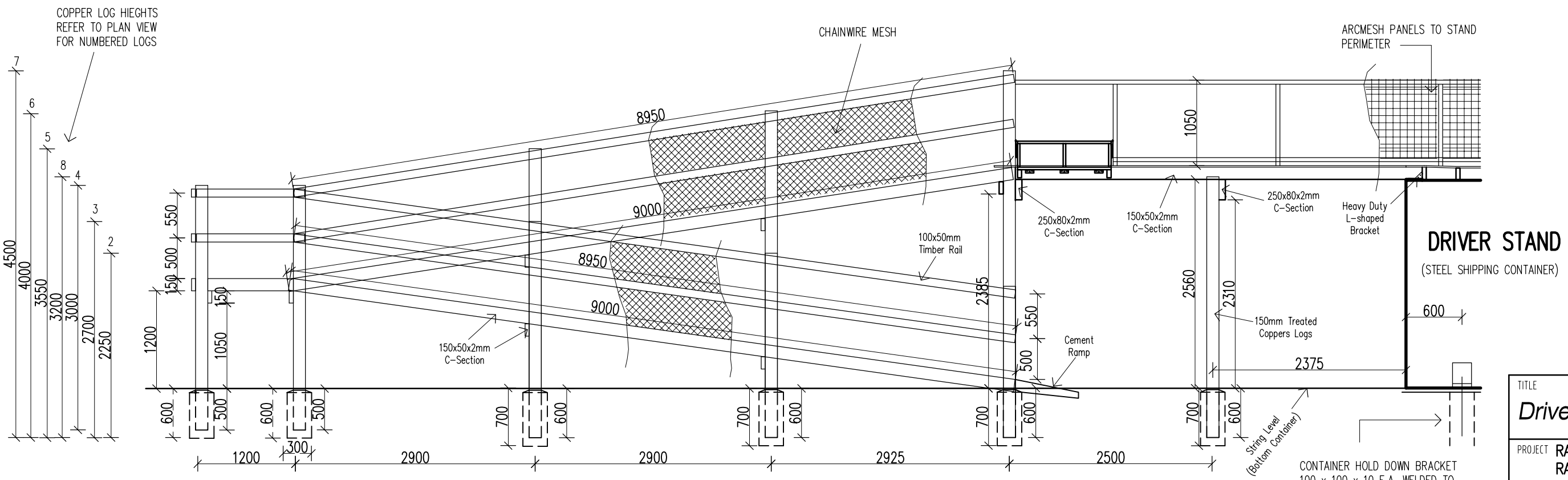

SIDE ELEVATION

CONTAINER HOLD DOWN BRACKET 100 x 100 x 10 E.A. WELDED TO CONTAINER, 1/M16 x 500 LONG HOLD DOWN BOLT. 450 DIA FOOTING x 600 DEEP. PROVIDE 4 TIE-DOWN LOCATIONS 600 IN FROM EACH CORNER

TITLE *Drivers Stand Ramp*	
PROJECT RACING DRIVERS STAND RAMP	
ADDRESS	
DRAWN DA	DATE NOV 09
SCALE NTS	ISSUE 1
JOB NO. 28-452	SHEET 2